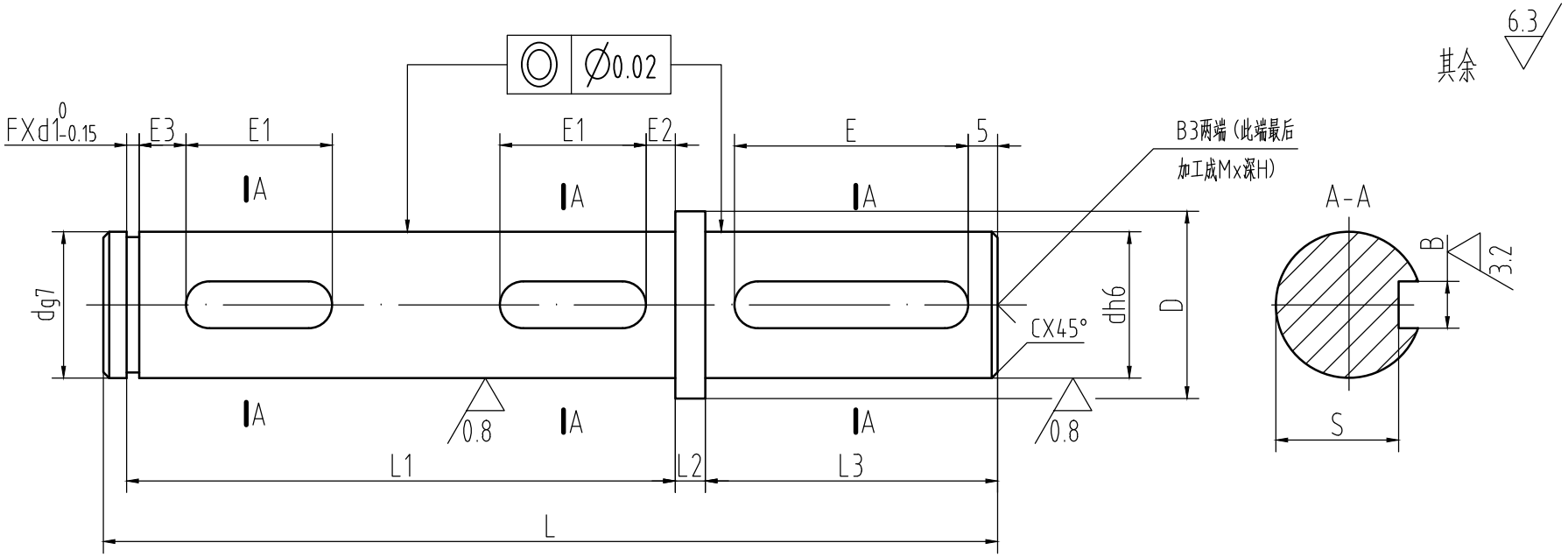

材料：钢45

热处理:调质HB220-260

NMRV单向输出轴

规格	D	dh6	dg7	FXd1	L	L1	L2	L3	E	E2	E1	E3	B	S	MX深H	C
030	Ø20	$Ø14^{0}_{-0.011}$	$Ø14^{-0.006}_{-0.024}$	$1.1^{+0.14}_{0}$X$Ø13.4^{0}_{-0.11}$	102	$66.5^{+0.10}_{0}$	2.5	30	20	2.5	20	5	$5^{0}_{-0.03}$	$11^{0}_{-0.10}$	M6深15	0.5
040	Ø24	$Ø19^{0}_{-0.013}$	$Ø19^{-0.007}_{-0.028}$	$1.1^{+0.14}_{0}$X$Ø18^{0}_{-0.11}$	128	$82^{+0.10}_{0}$	3	40	30	5	20	8	$6^{0}_{-0.03}$	$15.5^{0}_{-0.10}$	M6深15	0.5
050	Ø32	$Ø25^{0}_{-0.013}$	$Ø25^{-0.007}_{-0.028}$	$1.3^{+0.14}_{0}$X$Ø23.9^{0}_{-0.21}$	153	$96.7^{+0.10}_{0}$	3.5	50	40	5	25	8	$8^{0}_{-0.036}$	$21^{0}_{-0.20}$	M10深16	1
063	Ø32	$Ø25^{0}_{-0.013}$	$Ø25^{-0.007}_{-0.028}$	$1.3^{+0.14}_{0}$X$Ø23.9^{0}_{-0.21}$	173	$116.7^{+0.10}_{0}$	3.5	50	40	5	25	8	$8^{0}_{-0.036}$	$21^{0}_{-0.20}$	M10深16	1
075	Ø40	$Ø35^{0}_{-0.013}$	$Ø35^{-0.007}_{-0.028}$	$1.7^{+0.14}_{0}$X$Ø33^{0}_{-0.21}$	193	$126^{+0.10}_{0}$	3.5	60	50	5	25	9	$10^{0}_{-0.036}$	$30^{0}_{-0.20}$	M10深16	1
090	Ø40	$Ø35^{0}_{-0.016}$	$Ø35^{-0.009}_{-0.034}$	$1.7^{+0.14}_{0}$X$Ø33^{0}_{-0.25}$	234	$146^{+0.10}_{0}$	4.5	80	70	5	25	10	$10^{0}_{-0.036}$	$30^{0}_{-0.20}$	M12深16	1