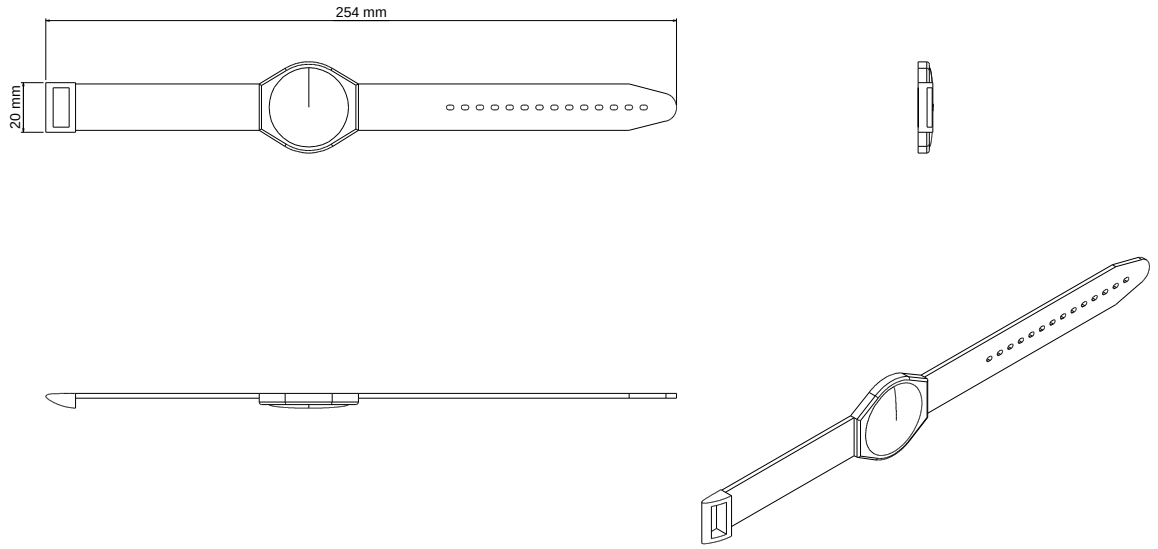
254 mm
20 mm