LONGTECH OPTICS

LCM4004A

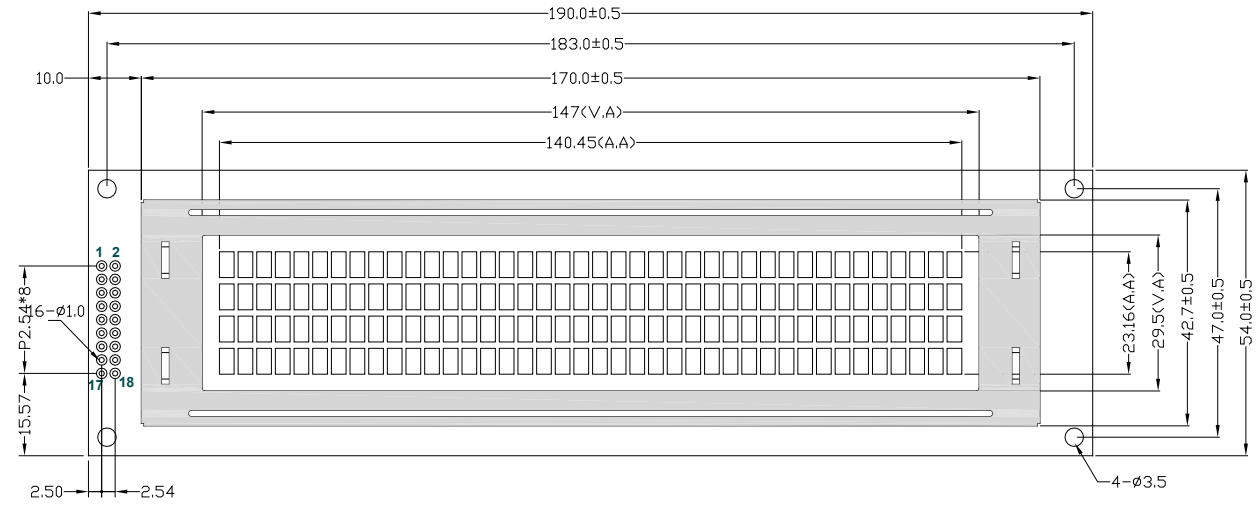

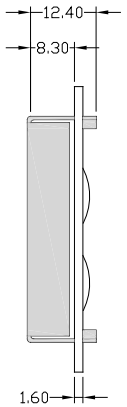

DOTS DETAIL

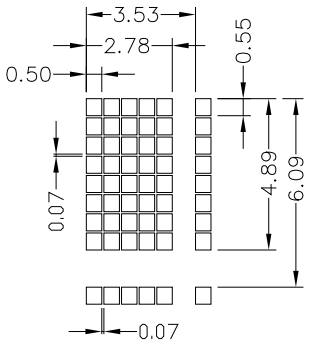

Pin connections

PIN NO	Symbol
1	DB7
2	DB6
3	DB5
4	DB4
5	DB3
6	DB2
7	DB1
8	DB0
9	E1
10	RW
11	RS
12	V0
13	VSS
14	VDD
15	E2
16	NC
17	A
18	K

Feature

1. 4-line x40 characters display; 5x8 dots with cursor
2. Built-in controller (KS0066U or Equivalent)
3. +5V power supply(Also available for +3.3V)
4. 1/16 duty cycle;1/5bias;
5. TN, HTN, STN or FSTN mode
6. BKL to be driven by pin1,pin2,or pin15,pin16,or A,K

Block diagram:

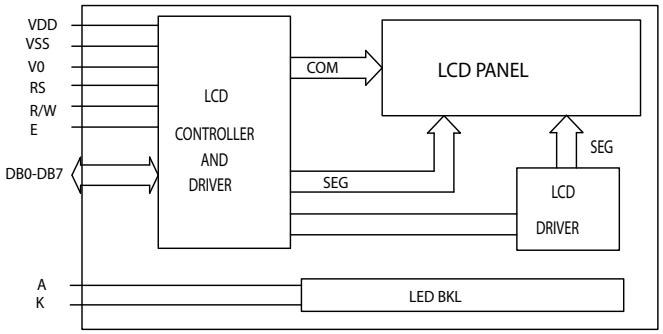

Display character address code

Display position

	1	2	3	---	---	---	---	38	39	40
DDRAM address	00	01	02	---	---	---	---	25	26	27H
DDRAM address	40	41	42	---	---	---	---	65	66	67H
	00	01	02	---	---	---	---	25	26	27H
	40	41	42	---	---	---	---	65	66	67H

Mechanical thinkness

LCD module thinkness	T1	T2	UNIT
Without or EL backlight	5.4	9.5	mm
With edge LED backlight	----	-----	mm
With LED bottom backlight	8.9	13.0	mm

Mechanical data

Item	Standard	Unit
Module dimension	190.0x54.0	mm
Viewing area	147.0x29.5	mm
Dot size	0.50x0.55	mm
Character size	2.78x4.89	mm

Absolute Maximum Rating

Item	Symbol	Standard			Unit
		Min	Typ	Max	
Input voltage	VI	-0.3	--------	5.5	V
Power supply	VDD-VSS	-0.3	--------	VDD	

Electronical characteristics

Item	Symbol	Condition	Standard			Unit
			Min	Typ	Max	
Input voltage	VDD	+5V	4.7	5.0	5.5	V
		+3.3V	2.7	3.3	5.3	V
Supply current	IDD	VDD=5V	------	2.5	3	mA
Recommended LCD driving voltage for normal temp version module	VDD-V0	-20°C	4.8	5.0	5.3	V
		0 °C	4.6	4.8	5.0	
		25°C	4.3	4.5	4.7	
		50°C	4.2	4.3	4.5	
		70°C	4.1	4.2	4.3	
LED forward voltage	VF	25°C	------	4.2	4.6	V
LED forward current	IF	25°C	------	480	-----	mA
EL power supply current	IEL	VEL=110V AC 400Hz	-----	-------	------	mA