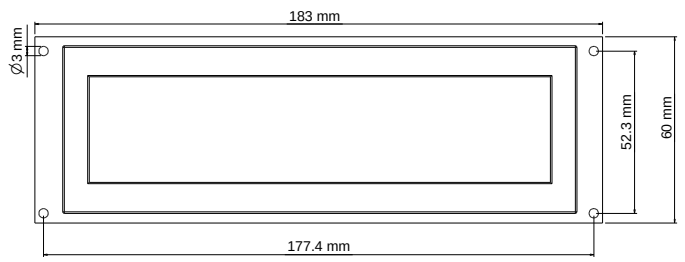
183 mm
Ø3 mm
52.3 mm
60 mm
177.4 mm

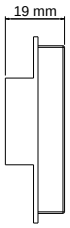
19 mm

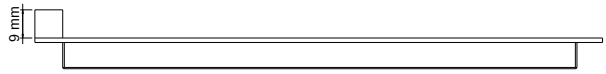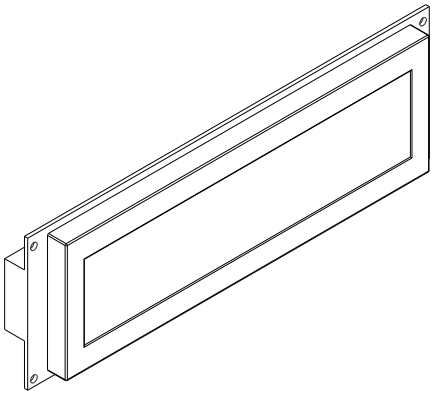
9 mm