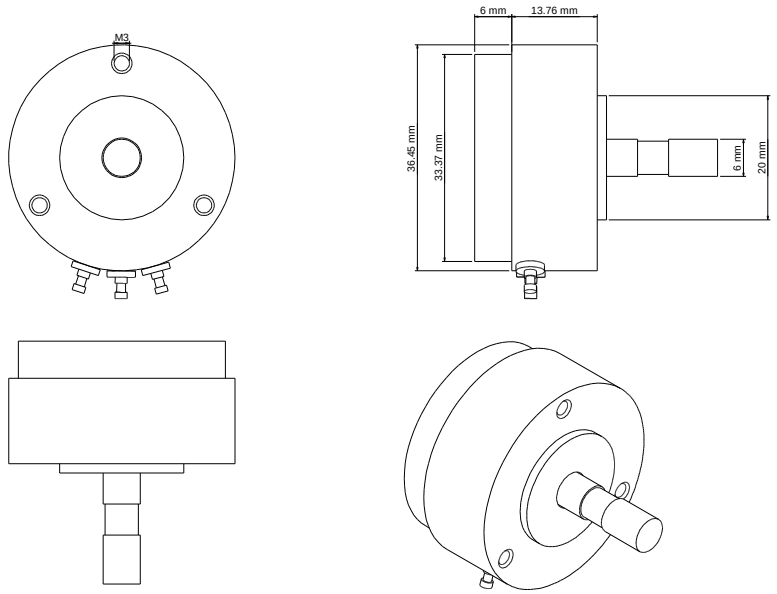
M3
6 mm
13.76 mm
36.45 mm
33.37 mm
6 mm
20 mm