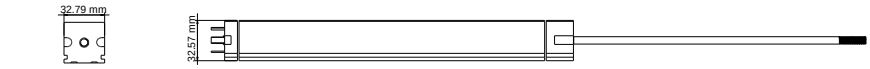
32.79 mm
32.57 mm

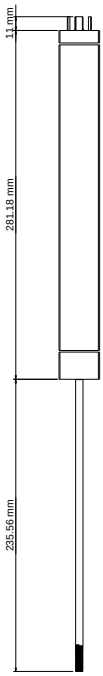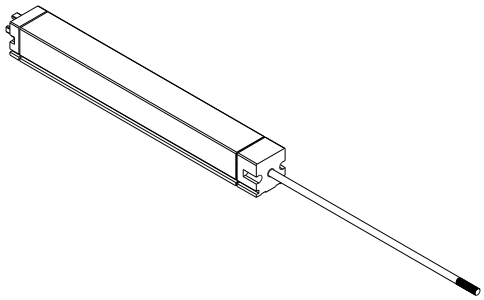
11 mm
281.18 mm
235.56 mm