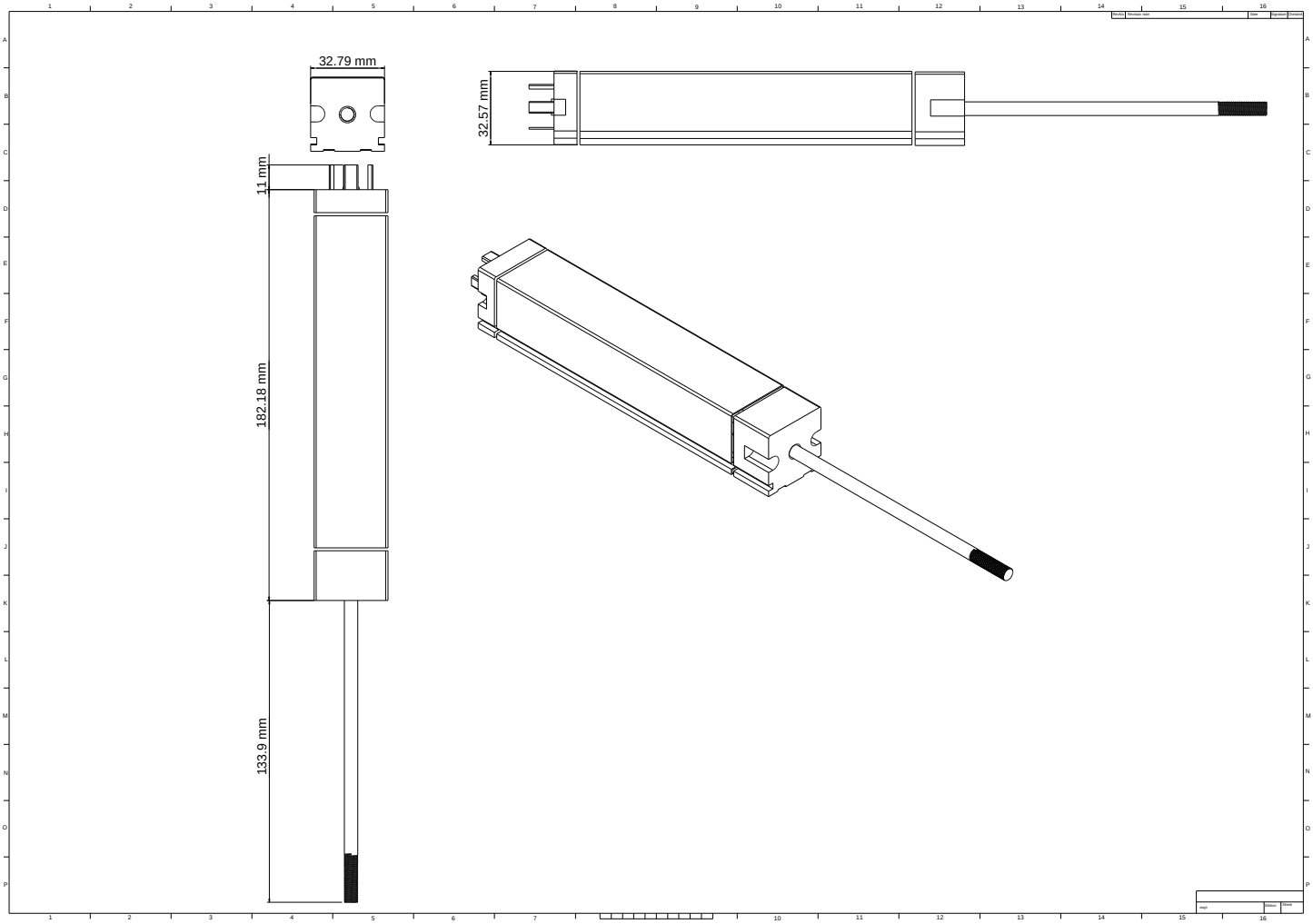
32.79 mm
32.57 mm
11 mm
182.18 mm
133.9 mm