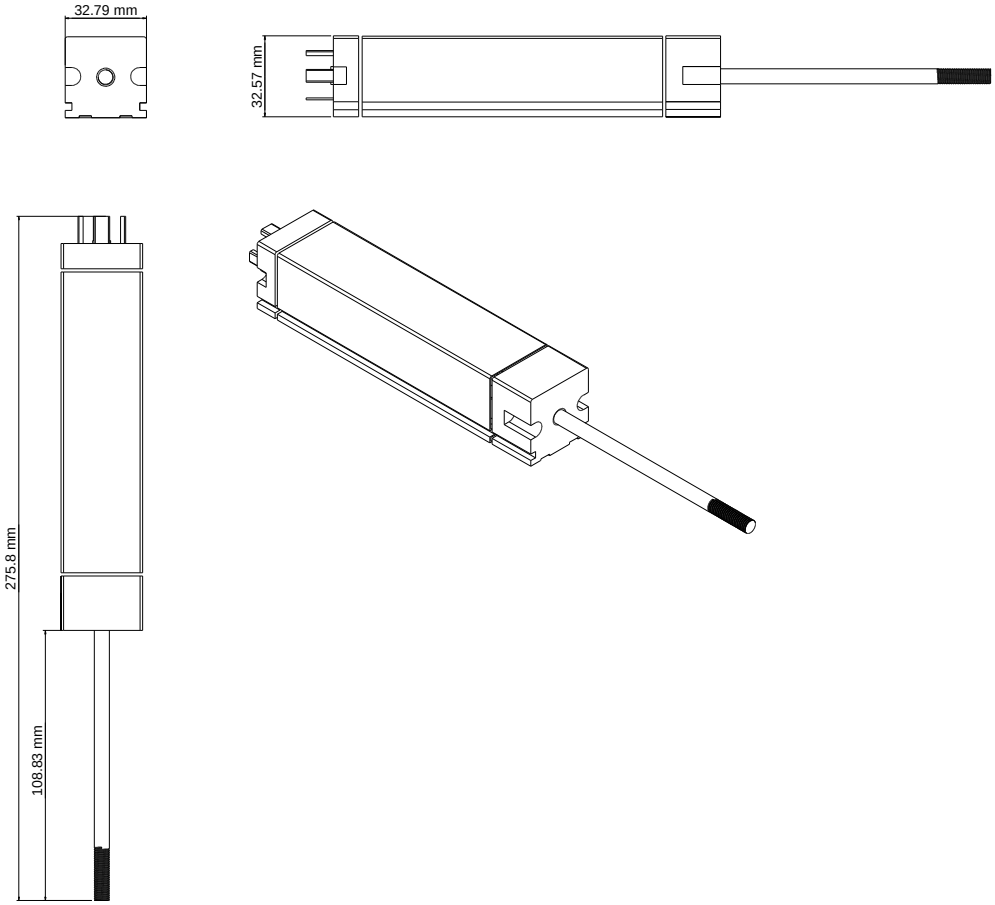
32.79 mm
32.57 mm
275.8 mm
108.83 mm