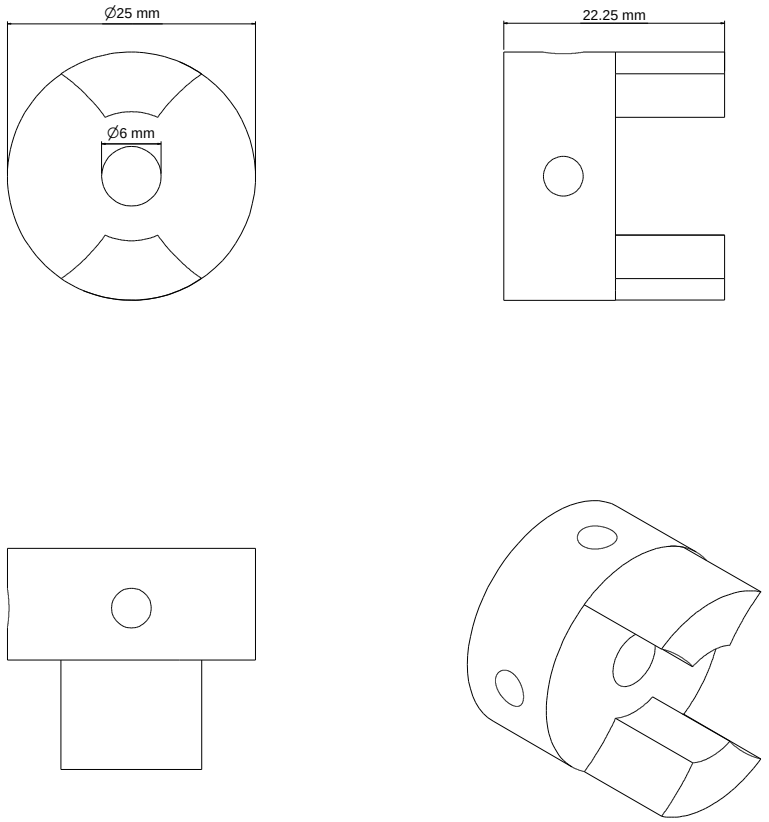
∅25 mm
∅6 mm
22.25 mm