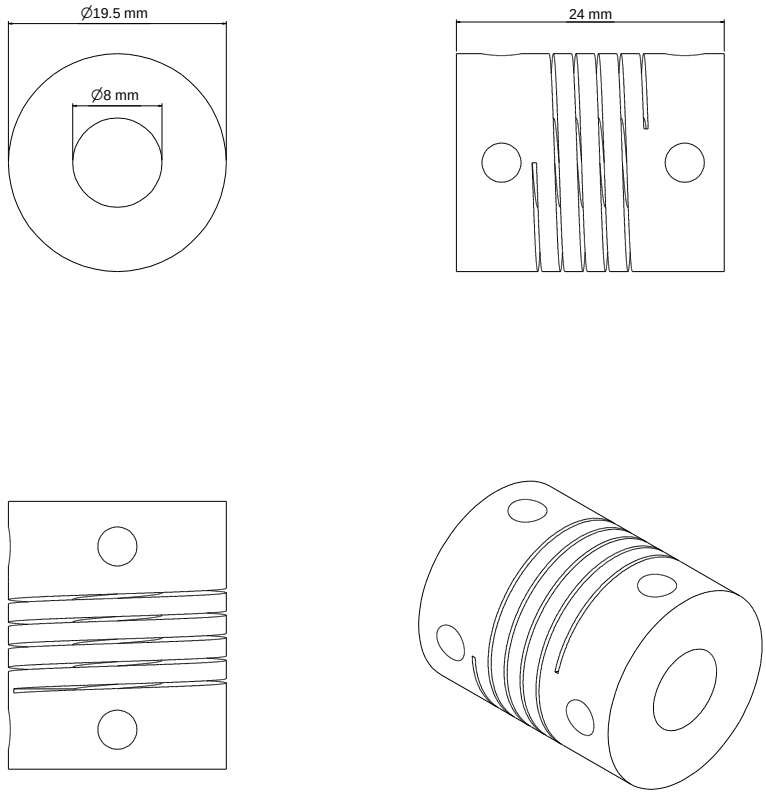
∅19.5 mm
∅8 mm
24 mm