1111_0 Mechanical Drawing

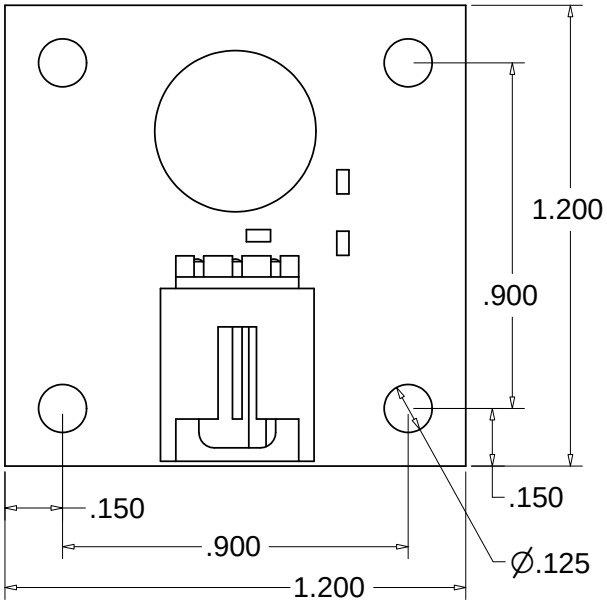

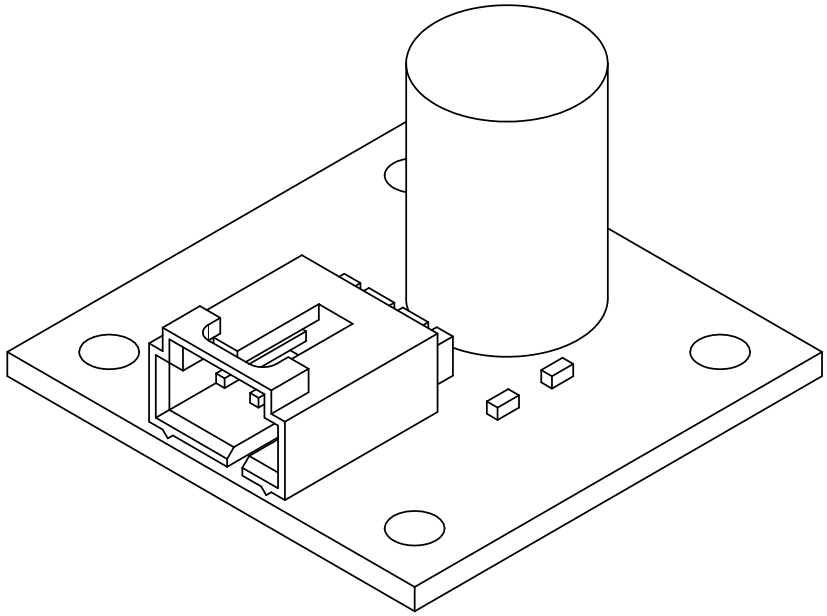

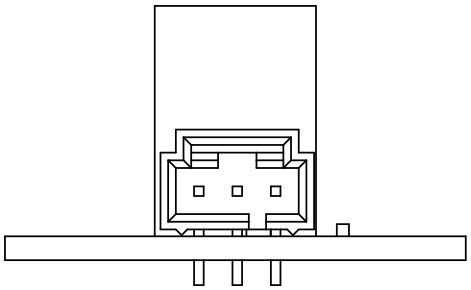

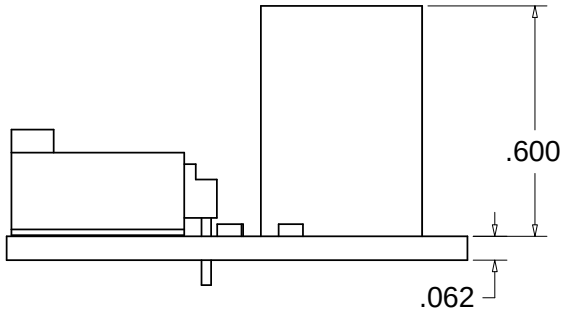

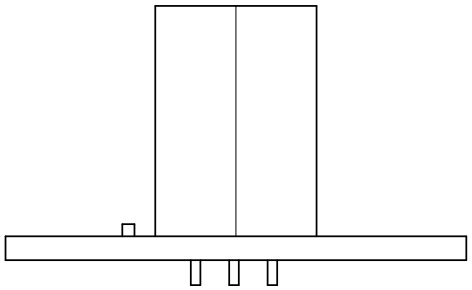

Scale 1:0.5
Units are in Inches