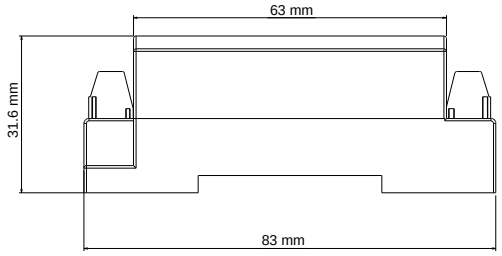
63 mm
31.6 mm
83 mm

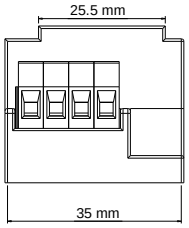
25.5 mm
35 mm

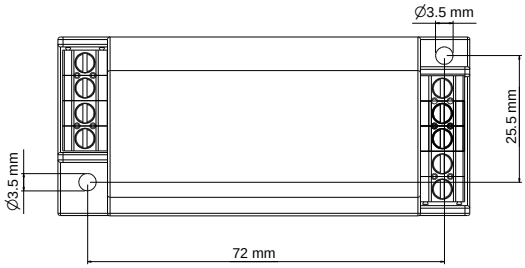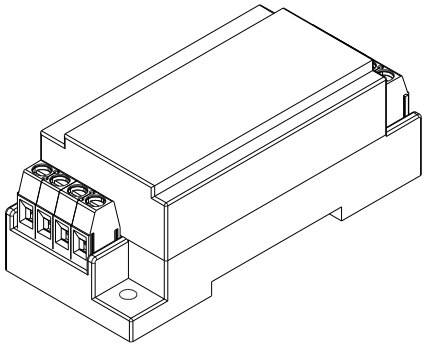
∅3.5 mm
25.5 mm
∅3.5 mm
72 mm